MAKING MODERN LIVING POSSIBLE

Technical Information

Loop Flushing Valve

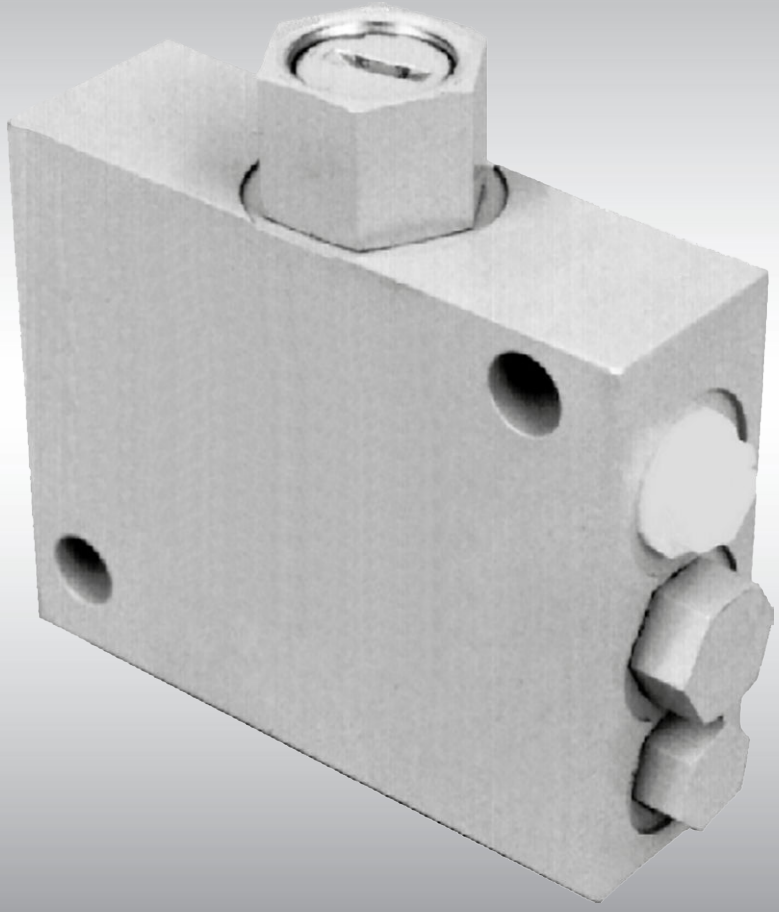

Revision history

Table of revisions

Date	Changed	Rev
Dec 2014	Danfoss Layout	EA
Oct 2011	Backpage updated	AB
Mar 2007	Update backpage	AA
July 2003	First edition	-

Contents

General information

Application....4
Description....4
Specifications....5
Model code....5
Performance....5
Mounting....6

Service Information

Adjustment procedure....8
Service information....8

General information

Application

The loop flushing valve, applied in a hydrostatic transmission circuit, maintains high quality of the working fluid in the transmission power loop. While many transmissions can operate satisfactorily without a loop flushing valve, the addition of loop flushing improves fluid quality and generally extends transmission life.

Consider the loop flushing valve when any of these exist:

- Sustained operation at low pressure and high speed
- Operation where continuous pressure exceeds 1000 hours per year
- Cylinders in the hydrostatic circuit
- Flow restricting valves in the power loop
- Frequent operation of high pressure relief valves
- Long power loop lines
- Extraordinary life requirements

Danfoss recommends monitoring fluid quality under field operating conditions for extended periods of time to determine loop flushing requirements. For a complete discussion of loop flushing and fluid quality, refer to Danfoss bulletins BLN-9886 *Transmission Circuit Recommendations* and 520L0463 *Hydraulic Fluids and Lubricants, Technical Information*.

Description

The high pressure ports (1 and 2) of the valve are externally connected to the work or system auxiliary ports of the main hydrostatic transmission circuit. The valve drain port (4) must be externally connected to the case drain return line of the transmission — preferably at the motor so that fluid flushes through the motor case and returns to the reservoir.

The shuttle valve exposes the low pressure side of the circuit to the charge relief valve. When properly set (see *Adjustment procedure* on page 8) the charge relief valve flushes a desired quantity of working fluid from the transmission power loop. The charge pump replaces this fluid.

You may specify a drain orifice to limit maximum flushing flow in circuits where the low side pressure is high or varies over a large range.

Schematic diagram

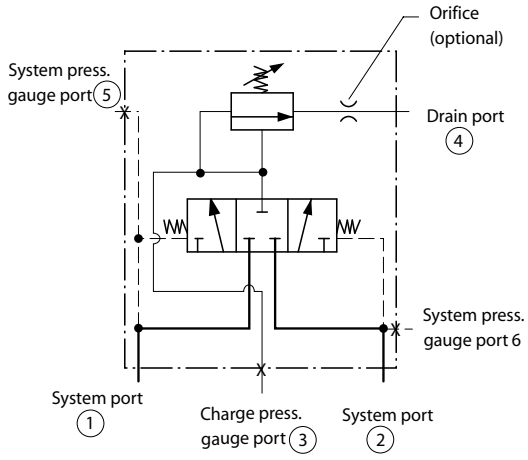

P104 162E

General information

Specifications

System pressure

Maximum high side	480 bar [6961 psi]
Maximum low side	70 bar [1015 psi]

Charge relief setting

Minimum	15 bar [218 psi]
Maximum	28 bar [406 psi]

Nominal charge relief settings are ±1.4 bar [±20 psi] and are set at a flow of 3.8 ±0.9 l/min [1 ±0.25 US gal/min] at 49° C [120° F]

Model code

8800485-□□-□□

Charge pressure
15 to 28 bar, 1 bar increments
Example:
20 = 20 bar [290 psi]

Orifice
00 = None
09 = Ø 2.40 mm [0.0945 in.]
12 = Ø 3.19 mm [0.1255 in.]

Performance

Valve without orifice

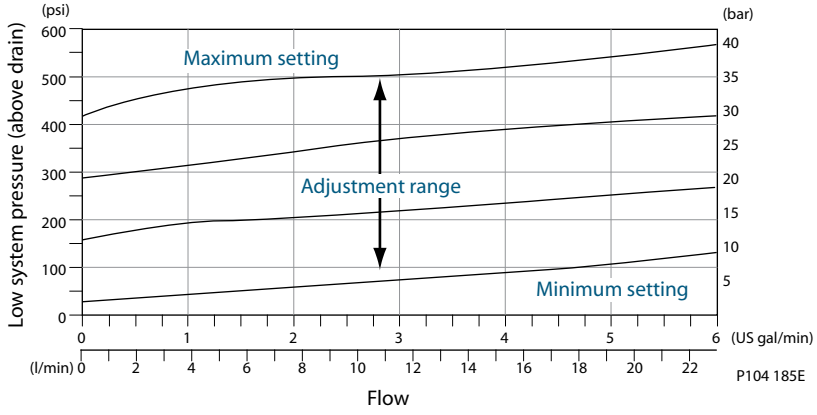

General information

Valve with 2.40 mm [0.0945 in.] orifice

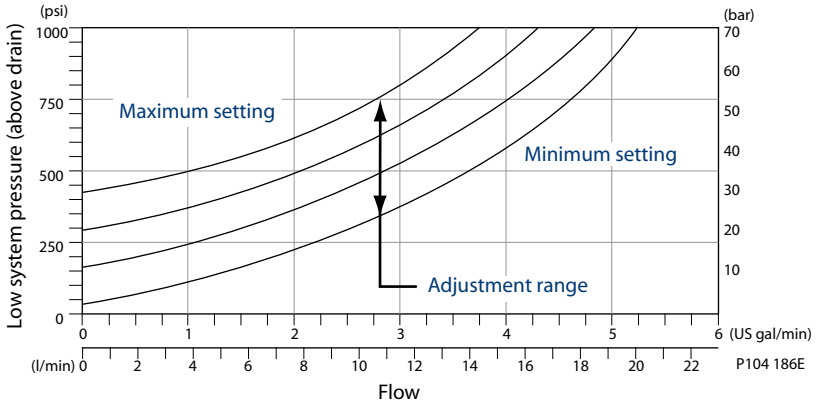

Mounting

Installation drawing

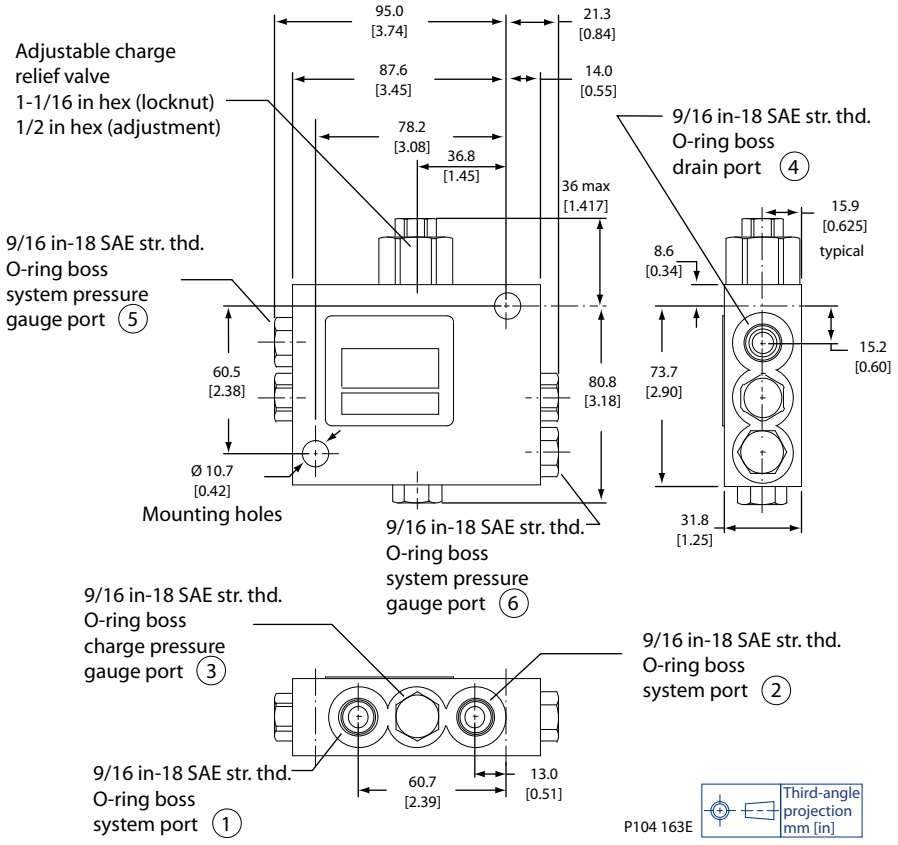

Mount the loop flushing valve on any convenient flat surface that provides adequate support around the two mounting holes. Ensure the surfaces under the mounting bolts form a flat plane.

Failure to provide a flat mounting surface could create valve housing distortion when the mounting bolts are torqued. Housing distortion may bind internal components and reduce the drive and/or braking capacity of the system.

General information

Warning

The loss of hydrostatic drive line power in any mode of operation may cause a loss of hydrostatic braking capacity. A braking system, redundant to the hydrostatic transmission, must be provided which is adequate to stop and hold the system should such a condition develop.

Service Information

Adjustment procedure

For initial setting of the valve package:

1. Plumb an in-line flow meter into the drain line.

   If a flow meter is not available, use a clean container with a known volume and a stop watch to measure flow rate.

2. Set the brakes or otherwise restrict machine motion.
3. Stroke the transmission pump to build at least 34 bar [500 psi] differential system pressure.
4. Adjust the relief valve in the flushing valve package to obtain the desired drain flow. Typically 7.5 to 11.4 l/min [2 to 3 US gal/min] is sufficient. Rotating the adjusting screw counter-clockwise increases flow and decreases the effective pressure setting by approximately 5 bar [73 psi] per turn.
5. Torque the locknut 42 to 55 N•m [31 to 41 lbf•ft].
6. Verify that pump charge pressure is above recommended minimum.
7. Remove the flow meter from the circuit.

Adjustment diagram

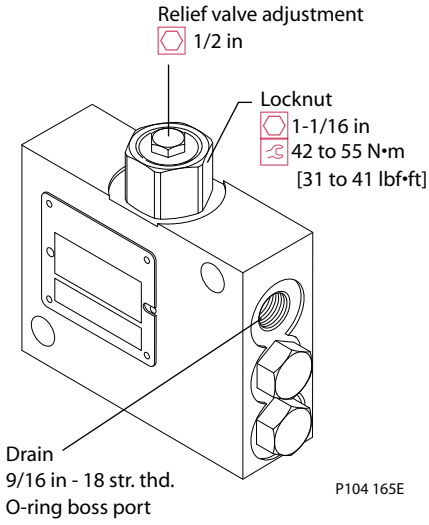

Service information

Component installation torque

Description	Wrench size	Torque
Gauge port plugs	9/16 in hex	27 to 47 N•m [20 to 35 lbf•ft]
Charge relief lock nut	1 1/16 in hex	42 to 55 N•m [31 to 41 lbf•ft]
Orifice plug	3/16 in internal hex	22 to 27 N•m [16 to 20 lbf•ft]
Shuttle spool plugs	11/16 in	36 to 44 N•m [27 to 33 lbf•ft]
Hose/tube fittings	—	27 to 47 N•m [20 to 35 lbf•ft]

Service Information

Exploded view

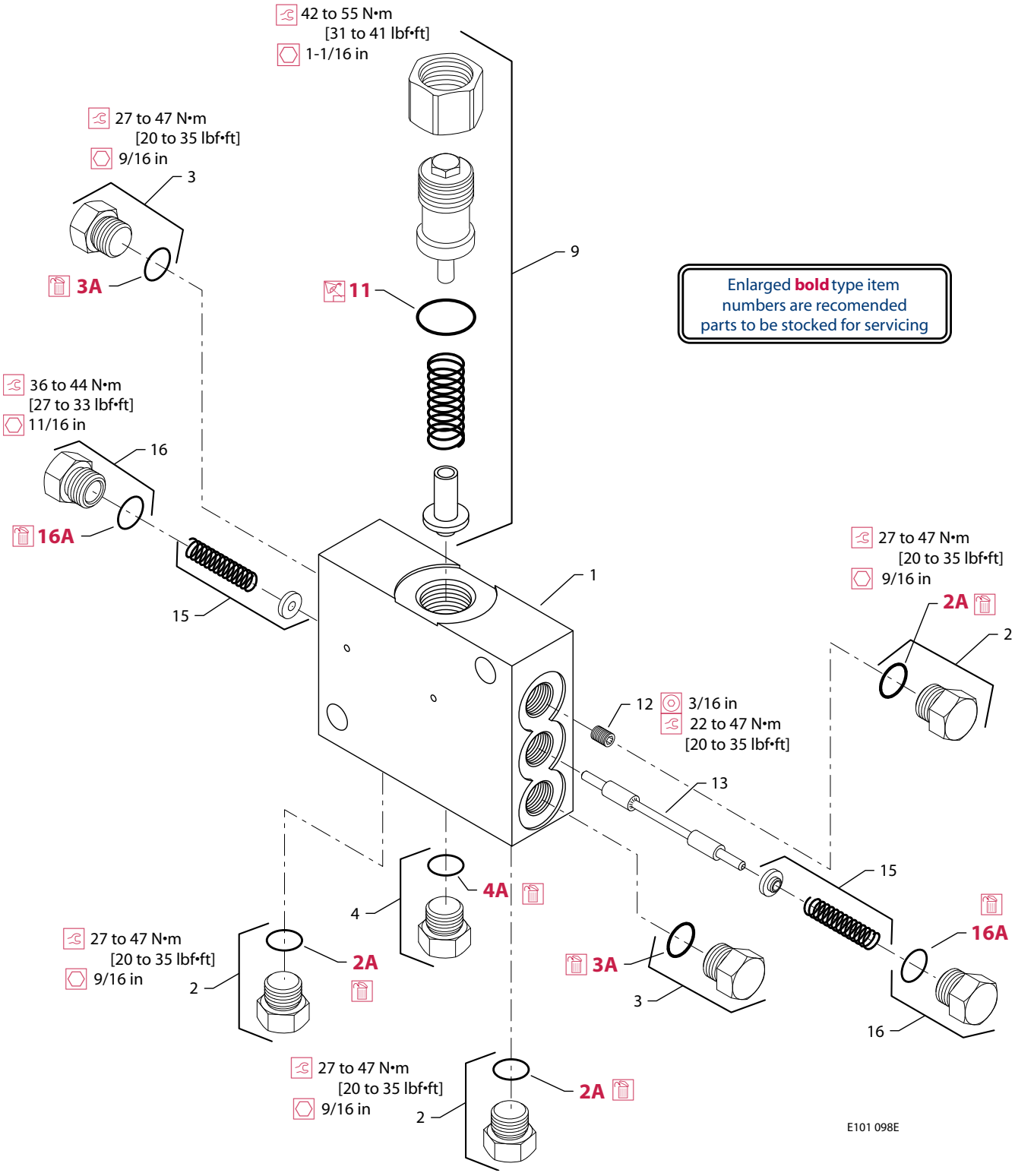

Service Information

Replacement parts

Item	Part Number	Description	Quantity
1	8800538	Housing assembly	1
2	9005100-5600	Plug	3
2A	9004201-3700	O-ring	3
3	9005100-5600	Plug	2
3A	9004201-3700	O-ring	2
4	9005100-5600	Plug	1
4A	9004201-3700	O-ring	1
9	8510012	Charge relief valve kit	1
11	9004201-6200	O-ring	1
12	8800242-0009	Orifice plug – Ø 2.40 mm [0.0945 in]	1 (opt.)
12	8800242-0011	Orifice plug – Ø 3.19 mm [0.1255 in]	1 (opt.)
13	8800550	Shuttle spool	1
15	513596	Spring guide assembly	2
16	518016	Special plug	2
16A	9004201-3700	O-ring	2