Coils - Connectors

COIL S8-356 - G2 - CLASS H - 19.5 W

OD.02.28 - X - Y - Z

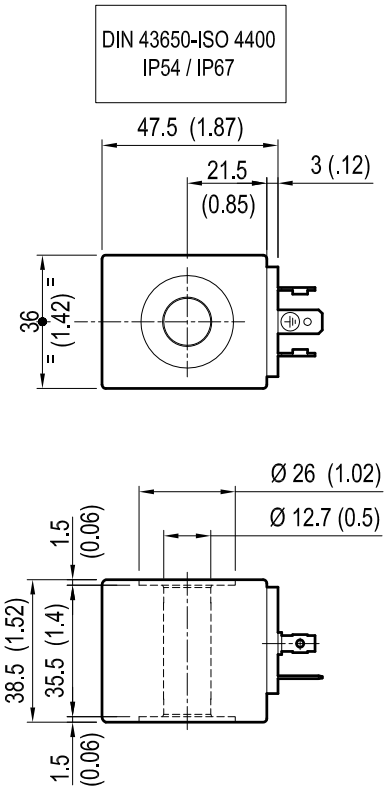

[mm / Inches]

TECHNICAL DATA
Weight DC: 0.20 kg (0.44 lbs)
Weight RAC: 0.19 kg (0.42 lbs)
Heat insulation Class H: 180°C (356°F)
Ambient temperature range: -30/+60°C (-22/+140°F)

Inlet voltage fluctuations must not exceed ±10%

X	Y	Connections	Circuit	Voltage
01	30	DIN 43650 - ISO 4400	Standard	DC - RAC

Z	Voltage V	Resistance Ohm (±7%)	Power W	Current A		ΔT °C (°F)
	Nominal	Ta = 20-25°C (68-77°F)	Cold coil	Cold coil	Hot coil	1 hour energized at Ta=20-25°C (68-77°F) Nominal voltage
GV	230 DC	2697.73	19.5	* 0.075	* 0.058	95-100 (205-215)
GA	230 RAC	2179.39	19.5	* 0.087	* 0.064	

* Note: current valves with Ta= 60 °C (140 °F)

Preferred types (readily available)

Type	Material number
OD02280130GA00	R934004894
OD02280130GV00	R934004895

Type	Material number

Further types available by request