RX Submersible pumps for DRAINAGE

Clear waters
Domestic use
Civil use

※ **Pumps entirely made of stainless steel**

PERFORMANCE RANGE

- Flow rate up to **320 l/min** (19.2 m³/h)
- Head up to **20.5 m**

INSTALLATION AND USE

RX pumps are designed for efficiently draining **clear water** without abrasive particles. Their design ensures user-friendly operation and safe performance, thanks to complete motor cooling and a double shaft seal. Ideal for home and public applications, these pumps are perfect for permanent setups, quickly handling emergency situations like small floods in rooms, basements, and garages. They're also great for managing household wastewater from dishwashers and washing machines, as well as for sump emptying.

APPLICATION LIMITS

- Maximum operating depth below water level up to **10 m** (with an appropriately sized power cable)
- Liquid temperature up to **+50 °C** and up to +90 °C for short bursts (up to 3 minutes max) for intermittent service
- Capable of processing suspended solids up to **Ø 10 mm**
- Draining capability:
  - up to **14 mm** from the bottom for RX 1-2-3
  - up to **25 mm** from the bottom for RX 4-5

PATENTS - TRADE MARKS - MODELS

- Patent No. EP2313658
- Patent No. IT0001428923

INCLUDES

※ **5 m** power cable
※ Float switch for single-phase versions

AVAILABLE UPON REQUEST

※ Mechanical seal options available
※ Pumps with **10 m** power cable
※ Different voltage requirements 60 Hz frequency

※ **RX-GM**" pumps with magnetic float switch (suitable for small sumps)

※ **RX-GM**

CURVES AND PERFORMANCE DATA

50 Hz

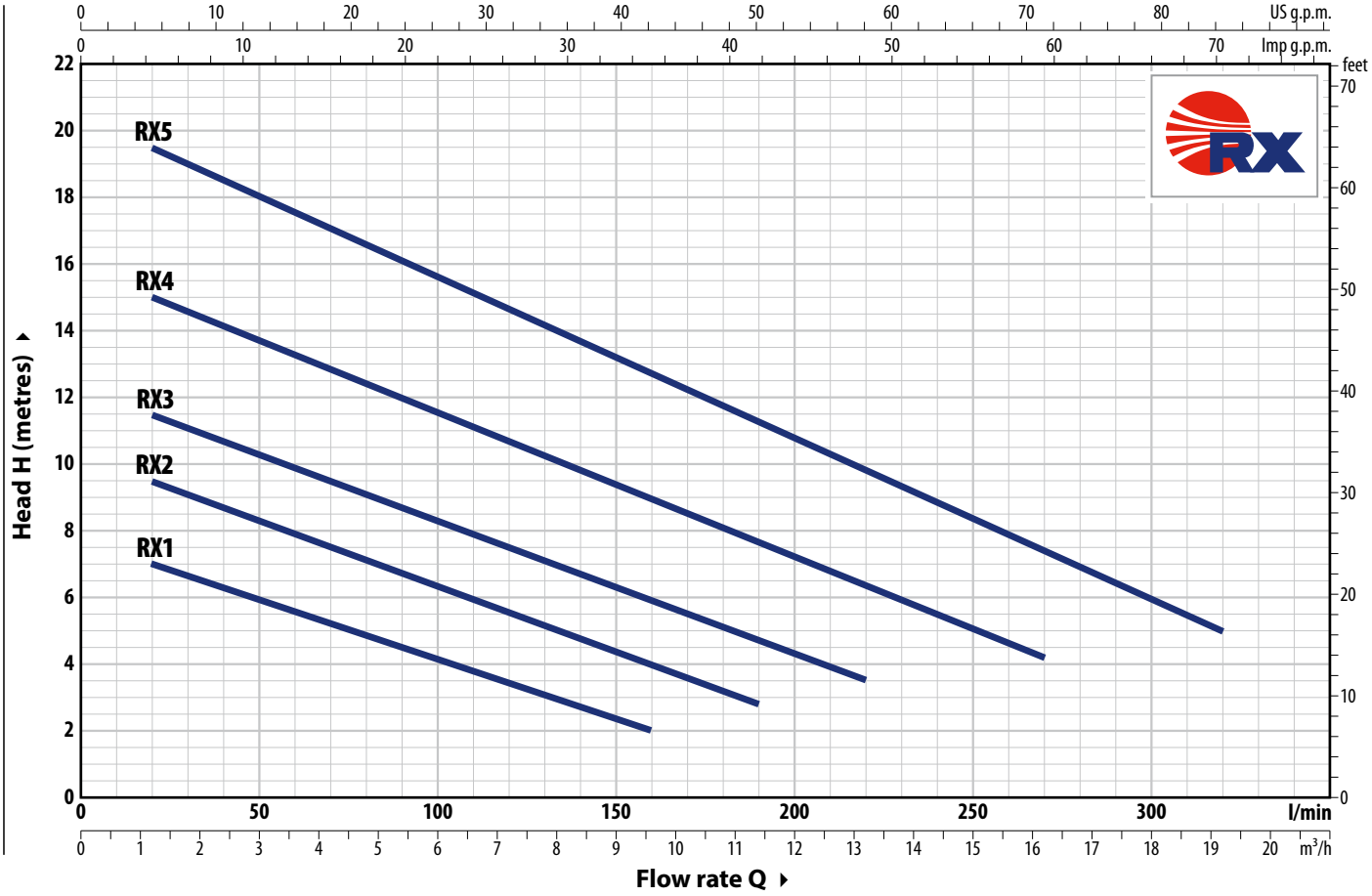

TYPE		POWER (P2)		Q m³/h	0	1.2	3.6	6	7.8	9.6	11.4	13.2	14.4	16.2	18	19.2
Single-ph.	**Three-ph.**	**kW**	**HP**	l/min	**0**	**20**	**60**	**100**	**130**	**160**	**190**	**220**	**240**	**270**	**300**	**320**
RXm 1	**RX 1**	0.25	0.33		7.7	7	5.6	4	3	2						
RXm 2	**RX 2**	0.37	0.50		10.3	9.5	8	6.4	5.2	4	2.8					
RXm 3	**RX 3**	0.55	0.75	**H** metres	12.3	11.5	10	8.3	7	6	4.7	3.5				
RXm 4	**RX 4**	0.75	1		16	15	13.3	11.5	10.3	9	7.7	6.4	5.5	4.2		
RXm 5	**RX 5**	1.1	1.5		20.5	19.5	17.6	15.6	14.2	12.7	11.3	9.8	9	7.4	6	5

Q = Flow rate **H** = Total manometric head

Performance curves comply with EN ISO 9906 Grade 3B tolerance limits.

ABSORPTION

TYPE Single-phase	VOLTAGE **230 V**
RXm 1	1.5 A
RXm 2	2.0 A
RXm 3	3.6 A
RXm 4	5.9 A
RXm 5	7.5 A

TYPE Three-phase	VOLTAGE **400 V**
RX 1	0.9 A
RX 2	**1.0** A
RX 3	1.6 A
RX 4	2.1 A
RX 5	3.5 A

DIMENSIONS AND WEIGHT

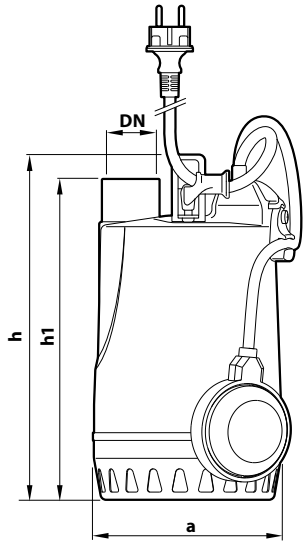

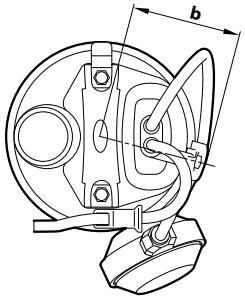

Typical installation

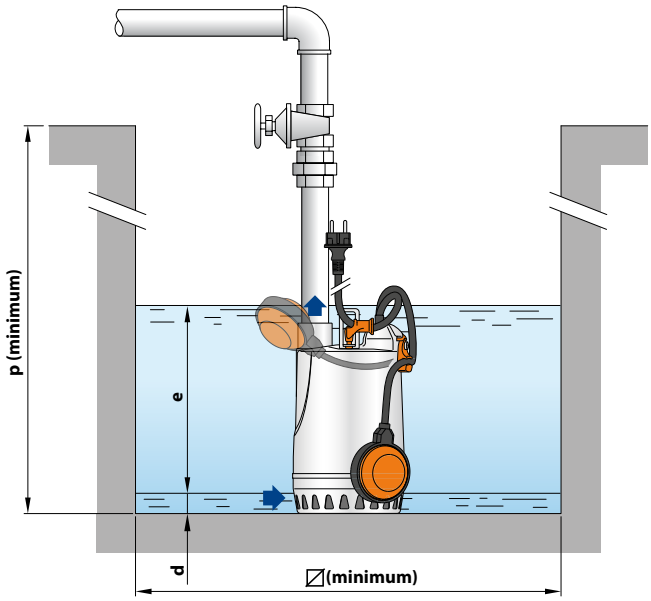

TYPE		PORT	DIMENSIONS mm								kg		PALLET CAPACITY
Single-phase	**Three-phase**	**DN**	a	b	h	h1	d	e	p	⧄	1~	3~	
RXm 1	**RX 1**	**1¼"**	147	84	268	243	14	adjustable	350	350	6.1	5.7	96
RXm 2	**RX 2**										6.1	5.7	96
RXm 3	**RX 3**				298	273					7.6	7.1	96

※ Version with 'GM' magnetic float switch

Typical installation

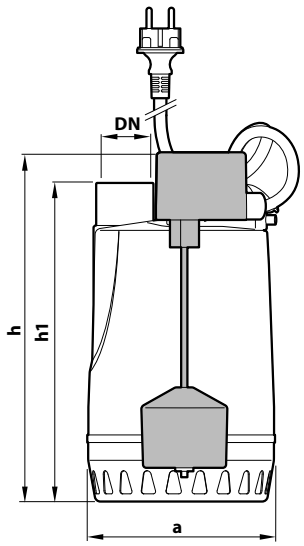

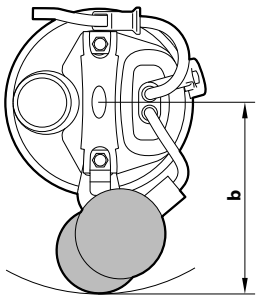

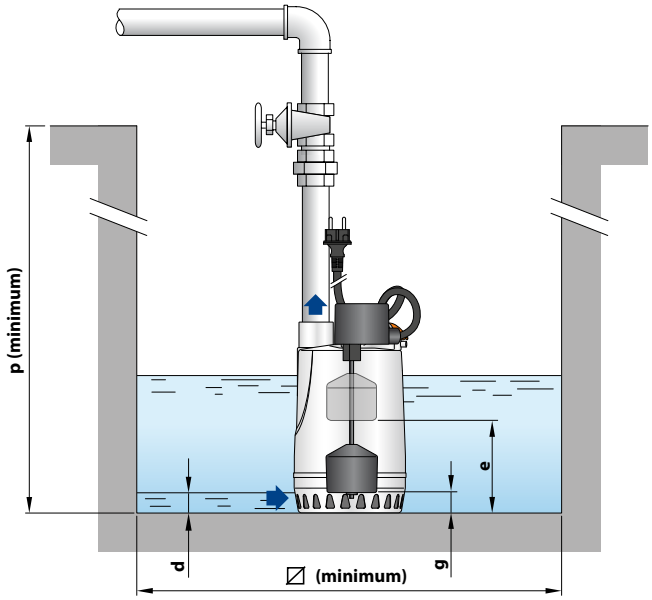

TYPE	PORT	DIMENSIONS mm									kg	PALLET CAPACITY
Single-phase	**DN**	a	b	h	h1	d	e	g (adjustable)	p	⧄	1~	
RXm 1-GM	**1¼"**	147	150	270	243	14	145	40	350	240	6.3	80
RXm 2-GM											6.3	80
RXm 3-GM				300	273		175	45			7.6	80

MATERIALS AND COMPONENTS

1	**Outer sleeve**	**AISI 304** stainless steel with ISO 228/1 threaded port
2	**Suction filter**	Stainless steel **AISI 304**
3	**Diffuser**	Stainless steel **AISI 304**
4	**Impeller**	Stainless steel **AISI 304**
5	**Motor sleeve**	Stainless steel **AISI 304**
6	**Motor cover**	Stainless steel **AISI 304**
7	**Motor shaft**	Stainless steel **AISI 431**

8 **Double shaft seal with interposed oil chamber**

Seal	Shaft	Materials
STA-12R	Ø 12 mm	Ceramic / Graphite / NBR

Shaft seal Ø 12 x Ø 19 x H 5 mm

9 **Capacitor**
(exclusive to single-phase models)

10 **Electric motor**

RXm: single-phase 230 V - 50 Hz with winding integrated thermal motor protection
RX: three-phase 400 V - 50 Hz
- Continuous running duty S1
- Insulation: Class F
- Protection rating IP X8

11 **Power cord**

Type 'H07 RN-F
(Schuko plug exclusive to single-phase models)

※ Standard length 5 metres

12 **Float switch**
(exclusive to single-phase models)

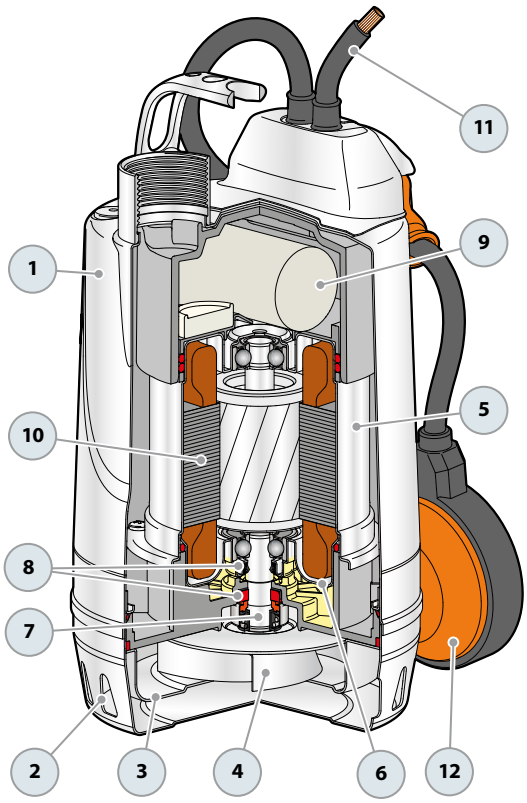

DIMENSIONS AND WEIGHT

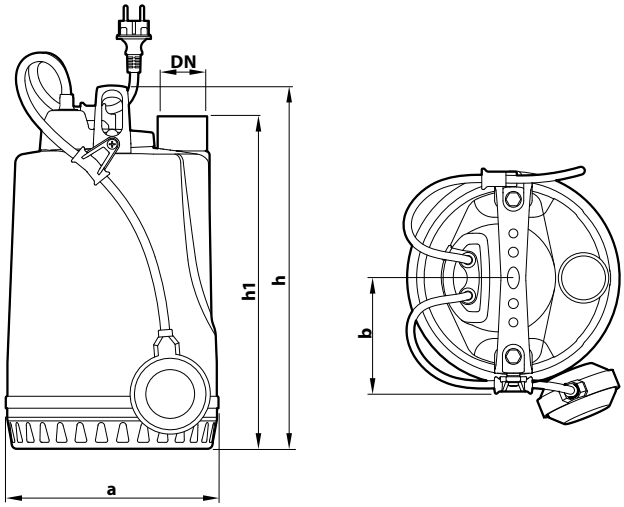

Typical installation

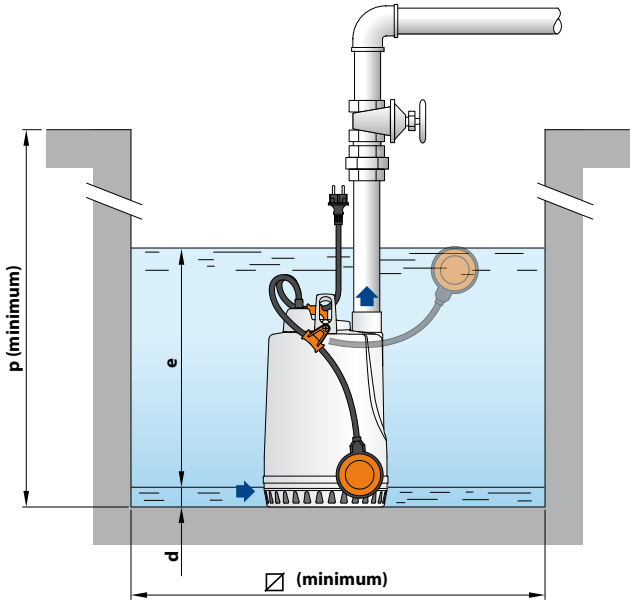

TYPE		PORT	DIMENSIONS mm								kg		PALLET CAPACITY
Single-phase	**Three-phase**	**DN**	a	b	h	h1	d	e	p	⧄	1~	3~	
RXm 4	**RX 4**	**1½"**	220	118.5	368	336	25	adjustable	500	500	14.3	13.3	45
RXm 5	**RX 5**										15.5	14.4	45

※ Version with 'GM' magnetic float switch

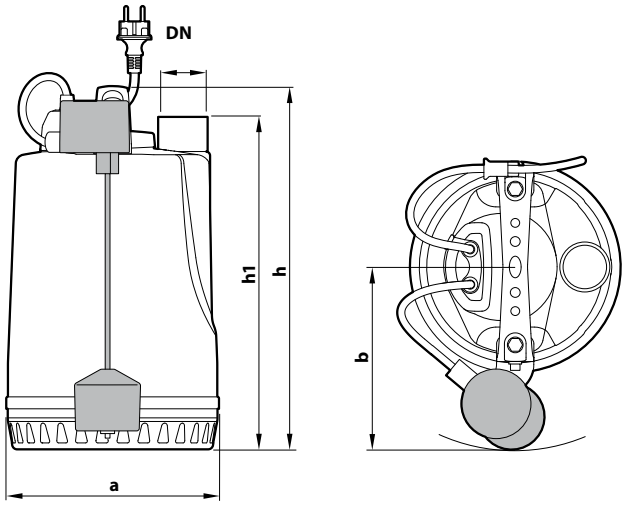

Typical installation

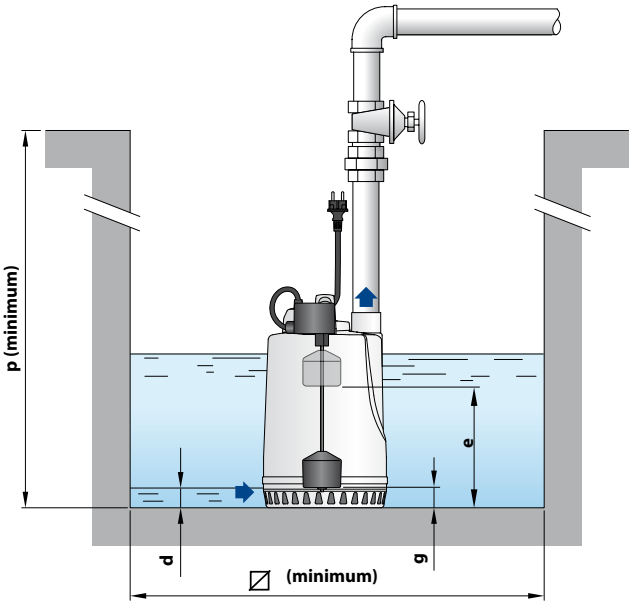

TYPE	PORT	DIMENSIONS mm									kg	PALLET CAPACITY
Single-phase	**DN**	a	b	h	h1	d	e	g (adjustable)	p	⧄	1~	
RXm 4 - GM	**1½"**	220	186.5	368	336	25	250	50	500	300	14.5	36
RXm 5 - GM											15.6	36

MATERIALS AND COMPONENTS

1	**Outer sleeve**	**AISI 304** stainless steel with ISO 228/1 threaded port
2	**Suction filter**	Stainless steel **AISI 304**
3	**Diffuser**	Stainless steel **AISI 304**
4	**Impeller**	Stainless steel **AISI 304**
5	**Motor sleeve**	Stainless steel **AISI 304**
6	**Motor cover**	Stainless steel **AISI 304**
7	**Motor shaft**	Stainless steel **AISI 431**

8 Double mechanical seal with interposed oil chamber

Seal	Shaft	Location	Materials
MG1-14D SIC	Ø 14 mm	Motor side	Silicon carbide / Graphite / NBR
		Pump side	Silicon carbide/Silicon carbide/NBR

9 Capacitor
(exclusive to single-phase models)

10 Electric motor

RXm: single-phase 230 V - 50 Hz with winding integrated thermal motor protection
RX: three-phase 400 V - 50 Hz
- Continuous running duty S1
- Insulation: Class F
- Protection rating IP X8

11 Power cord

Type 'H07 RN-F
(Schuko plug exclusive to single-phase models)

※ Standard length 5 metres
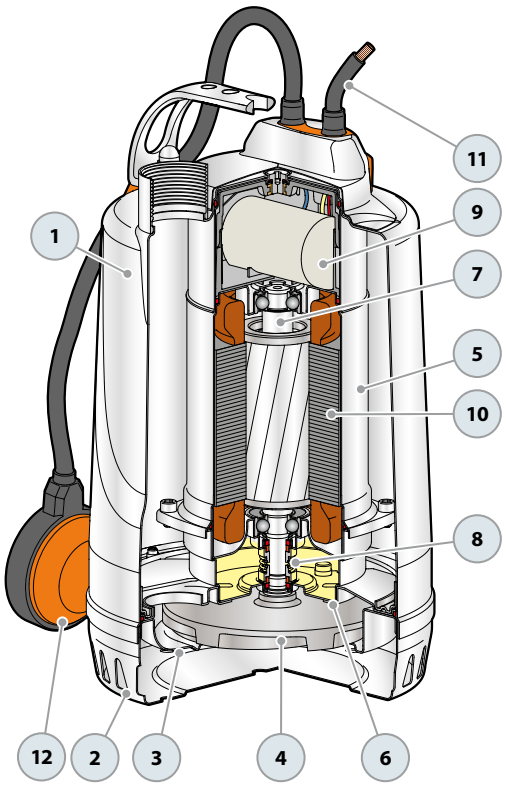
12 Float switch
(exclusive to single-phase models)